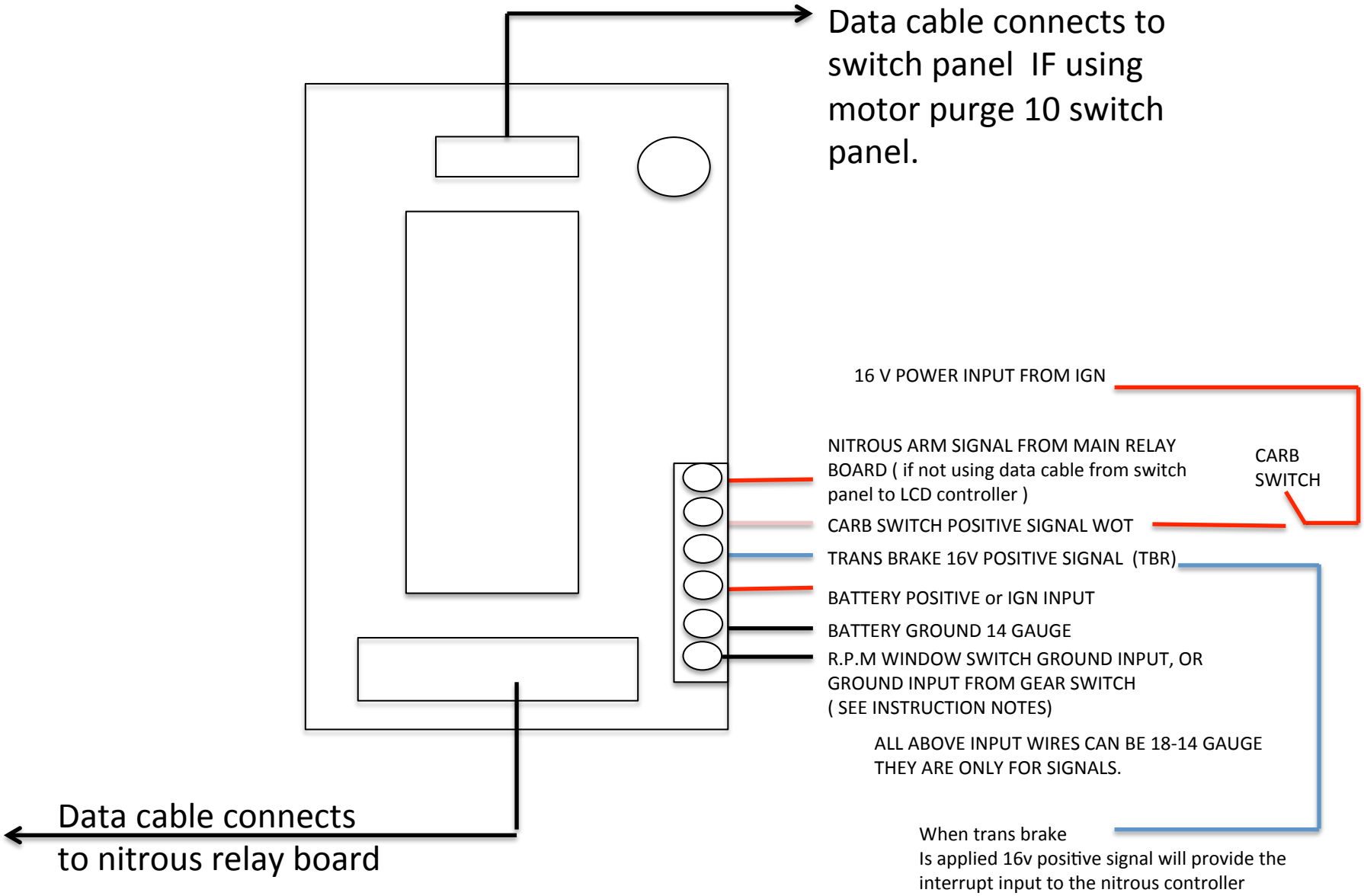SPEEDWIRE SYSTEMS PROSERIES NITROUS CONTROLLER INPUT SIGNAL DRAWING