MAIN DATA CABLE AND BATTERY CABLE CONNECTIONS FOR PROSERIES NITROUS SYSTEM USING 8 RELAY CONTROLLER

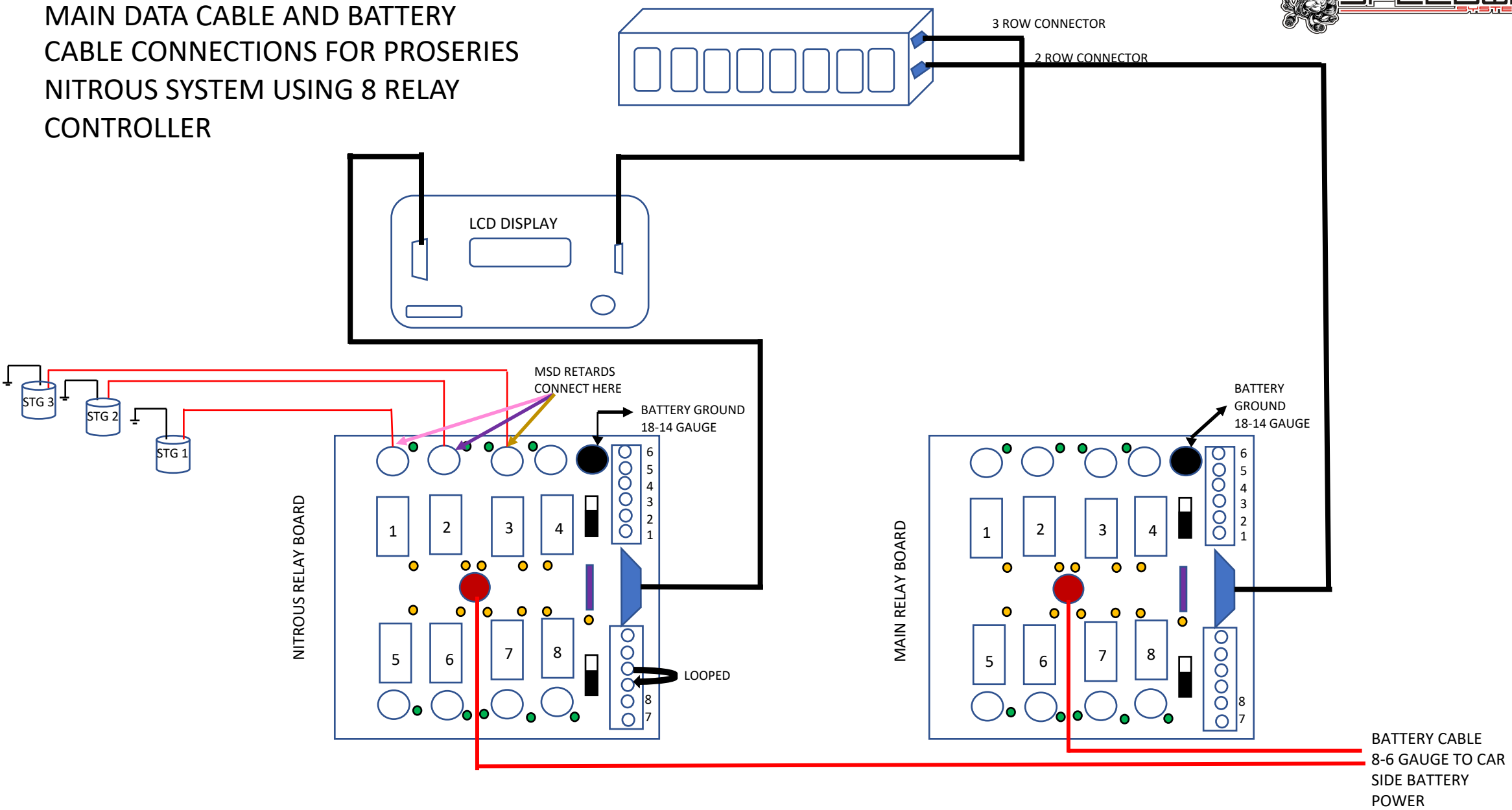

MAIN DATA CABLE AND BATTERY CABLE CONNECTIONS FOR PROSERIES NITROUS SYSTEM USING 14 RELAY CONTROLLER

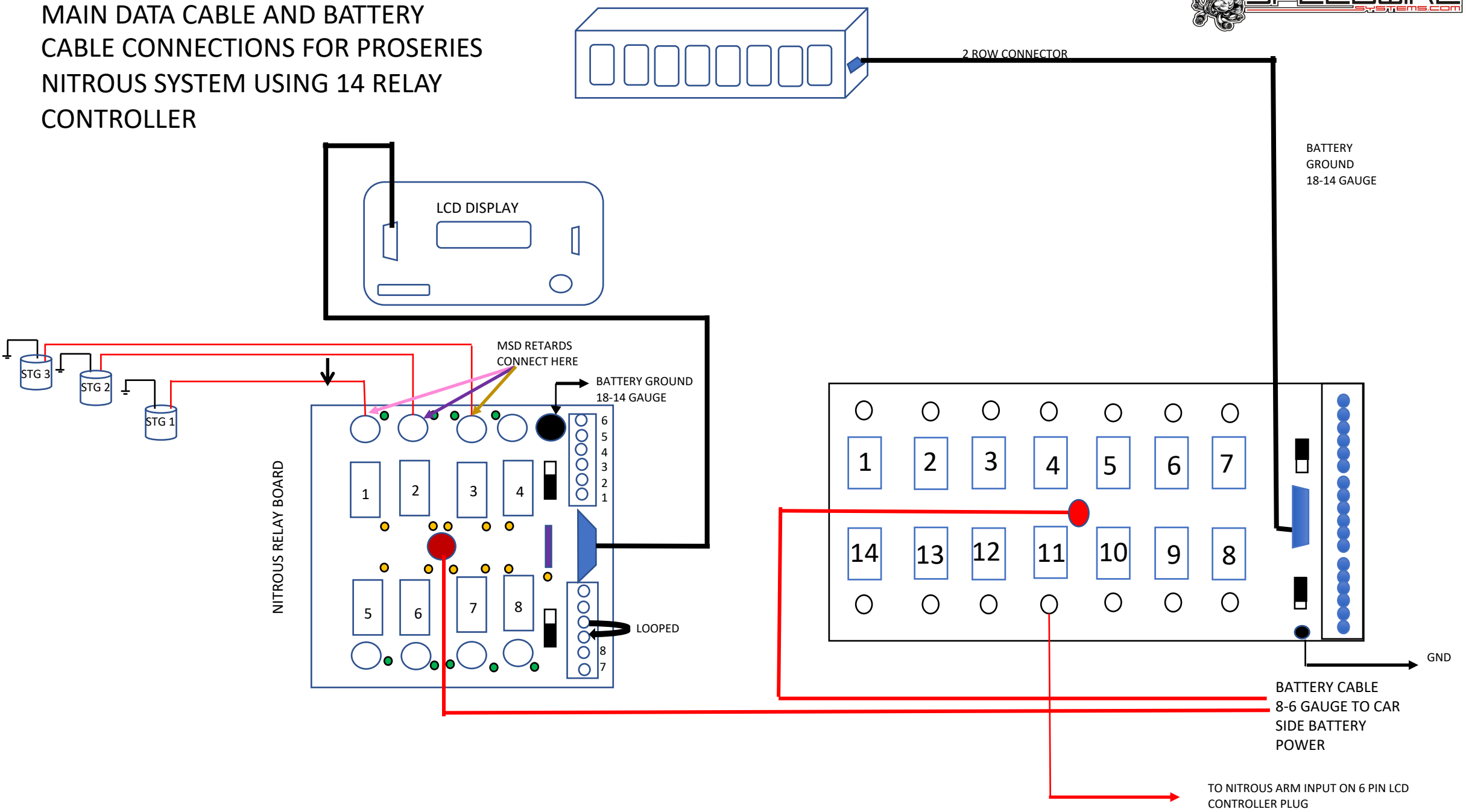

NITROUS 8 RELAY BOARD DRAWING WHEN USING OUR PROSERIES NITROUS CONTROLLER LCD SCREEN

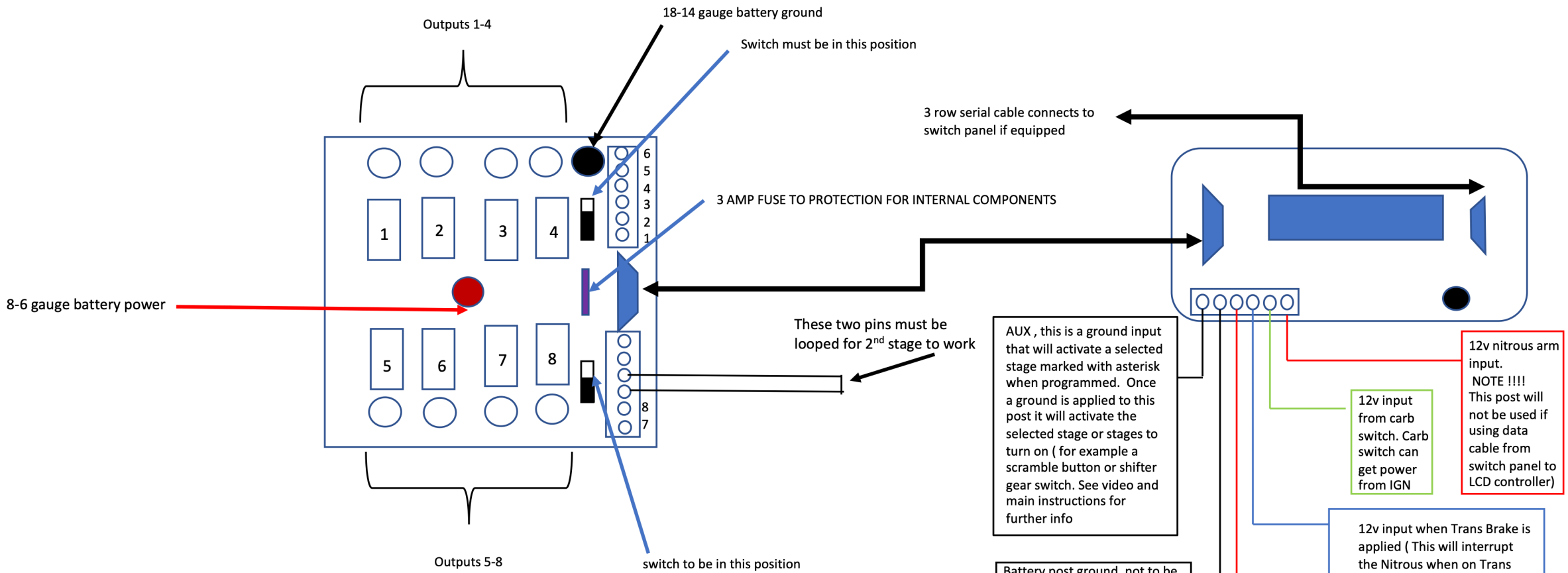

CONNECT MSD RETARD STAGE WIRES TO OUTPUTS ON EACH STAGE
SO WHEN THAT STAGE IS ACTIVATED IT WILL PROVIDE THE 12V TO MSD FOR STAGE RETARD.